UNIT-1

Digital Logic families

It is a collection of different IC chips that have similar input, output and internal circuit characteristics i.e. group of compatible ICs with same logic levels and supply voltages but perform different logic functions.

NOTE: 1) Chips from same family can be interconnected.
2) Chips from different family may not be compatible, means they may use different power supply voltages and input, output conditions.

Classification of Logic Families:

Logic families are mainly classified as two types as
A) Bipolar Logic Families: It mainly uses bipolar devices like diodes, transistors in addition to passive elements like resistors and capacitors. These are sub classified as Saturated bipolar logic family and Unsaturated bipolar logic family.
i) Saturated Bipolar Logic Family: In this family the transistors used in ICs are driven into saturation.
Examples: a)Transistor-Transistor Logic (TTL)
b) Resistor-Transistor Logic (RTL)
c) Direct Coupled Transistor Logic (DCTL)
d) Diode Transistor Logic (DTL)
e)High Threshold Logic(HTL)
f) Integrated Injection Logic (IIL or I2L)

ii)Unsaturated bipolar logic family: In this family the transistors used in ICs are not driven into saturation.
Examples: a) Schottky TTL
b) Emitter Coupled Logic(ECL)

B)Unipolar Logic Families: It mainly uses Unipolar devices like MOSFETs in addition to passive elements like resistors and capacitors. These logic families have the advantages of high speed and lower power consumption than Bipolar families. These are classified as
i) PMOS or P-Channel MOS Logic Family
ii) NMOS or N-Channel MOS Logic Family
iii) CMOS Logic Family

Bipolar Transistor Characteristics:

The basic building blocks in Bipolar logic families are diodes and transistors. If a logic circuit design involves diodes, transistors and resistors then it is called as 'Bipolar Logic'.

Bipolar junction transistor is a three terminal device with regions or terminals as Emitter, Base and Collector formed by back to back connection of PN-junction diode as N-P-N Transistor and P-N-P transistor. In bipolar junction transistor among three terminals Base region is lightly doped, Emitter region is heavily doped compared to Base and lightly doped compared to Collector and Collector is heavily doped region. Bipolar junction transistor is used as a *current controlled switch.* The Base current decides the operating region of the transistor.

Bipolar junction transistor can be operated in three regions or modes. They are

i) Cut-off Region: Both Base-Collector and Base-Emitter junctions are in reverse bias, only reverse current which is negligible will flows in the Transistor.

ii) Active Region: The base–emitter junction is forward biased and the base–collector junction is reverse biased. The collector–emitter current is approximately proportional to the base current.

iii) Saturation Region: Both Base-Collector and Base-Emitter junctions are in forward bias and voltage drops between Collector-Emitter and Base-Emitter are small(VCESat, VBESat). A large amount of current if flows which is controlled by RC.

Transistor Logic Inverter:

Let an N-P-N transistor connected in a CE configuration.

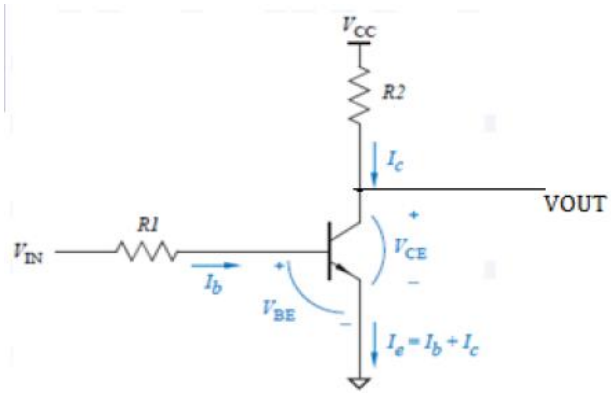

Case-1: Let Vin = 0 V, then Base-Emitter junction is not in forward bias, so no Base current (IB) will flows, Transistor is in OFF condition hence no current will flows through collector (IC). Then the output voltage VOUT= VCC= +5 V.

Case-2: Let Vin = 5 V, then Base-Emitter junction is in forward bias, so Base current (IB) will flows(select R1 and R2 values as to allow sufficient amount of IB), Transistor is in ON condition hence a large current(IC) will flows through collector. Then the output voltage VOUT= VCESat= between 0.2 to 0.3 V.

Transistor- Transistor Logic:

- The original basic transistor- transistor logic (TTL) gate was a slight improvement over the DTL gate.

- TTL widely used in the design of digital systems.
- Commercial TIL ICs have a number designation that starts with 74 and follows with a suffix that identifies the series. Examples are 7404, 74S86 and 74ALS161.
- The speed-power product is an important parameter used in comparing the various TIL series. It the product of the propagation delay and power dissipation. The speed-power product is measured in picojoules (pJ).
- A low value for this parameter is desirable because it indicates that a given propagation delay can be achieved without excessive power dissipation and vice versa.
- The standard TTL gate was the first version in theTTL family. This basic gate was then designed with different resistor values to produce gates with lower power dissipation or with higher speed.
- The propagation delay of a transistor circuit that goes into saturation depends mostly on two factors: **storage time and RC time constants**.
- Reducing the storage time decreases the propagation delay. Reducing resistor values in the circuit reduces the RC time constants and decreases the propagation delay.
- Of course, the trade-off is higher power dissipation, because lower resistances draw more current from the power supply. The speed of the gate is inversely proportional to the propagation delay.
- In the **low-power TIL gate**, the resistor values are higher than in the standard gate in order to reduce the power dissipation but the propagation delay is increased.
- In the **high-speed TTL gate**, resistor values are lowered to reduce the propagation delay. but the power dissipation is increased.
- The **Schottky TTL gate** was the next improvement in the technology. The effect of the Schottky transistor is to remove the storage time delay by preventing the transistor from going into saturation. This series increases the speed of operation of the circuit without an excessive increase in power dissipation.
- **The low-power Schottky TTL** sacrifices some speed for reduced power dissipation. It isequal to the standard TTL in propagation delay, but has only one-fifth the power dissipation.
- Further innovations led to the development of the advanced Schottky series, which provides an improvement in propagation delay over the Schottky series and also lowers the power dissipation.

- The advanced low-power Schottky has the lowest speed- power product and is the most efficient series. The fast TTL family is the best choice for high-speed designs.

- All TTL series are available in S81components and in more complex forms. such as MSI and LSI components.

- The differences in the TTL series are not in the digital logic that they perform, but rather in the internal construction of the basic NAND gale.

- In any case, TTL gates in all the available series come in three different types of output configuration:

    1. Open -collector output
    2. Totem-pole output
    3. Three-state output.

1. Open-Collector Output Gate

- The basic TIL gate is a modified circuit of the DTL gate shown in figure 1.

- The multiple emitters in transistor QI are connected to the inputs, these emitters behave like the input diodes in the DTL gate, since they form a pn junction with their common base.

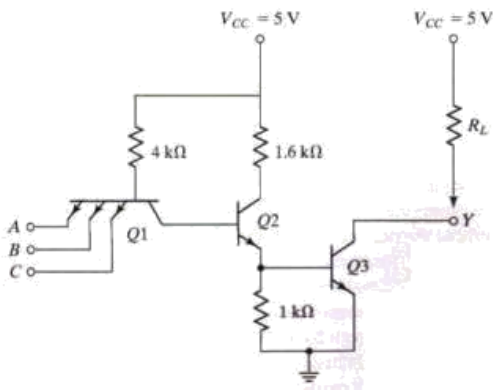

Fig 1 .open-collector TTL NAND gate

- The base-collector junction of Q1 acts as another pn junction diode corresponding to D1 in the DTL gate

- Transistor Q2 replaces the second diode D2 in the DTL gale. The output of the TTL gate is taken from the open collector of Q3. A resistor connected to Vcc must be

inserted externally to the IC package for the output to ‘pull up’ to the high voltage level when Q3 is off; otherwise, the Output acts as an open circuit.

- The two voltage levels of the TTL gate **are 0.2 V for the low level and from 2.4 to 5 voltsfor the high level**
- The basic circuit is a **NAND** gate

Operation of NAND Gate

If any input is low, the corresponding base-emitter junction in Q1 is forwardbiased. The voltage at the base of Q1 is equal to the input voltage of 0.2 V plus a VBE drop of 0.7 or 0.9 V. In order for Q3 to start conducting, the path from Q1 to Q3 must overcome a potential of one diode drop in the base-collector pn junction of Q1 and two VBE drops in Q2 andQ3, or 3 x 0.6 = 1.8 V. Since the base of QI is maintained at 0.9 V by the input signal, the output transistor cannot conduct and is cut off. The output level will be high if an external resistor is connected between the output and Vcc(or an open circuit if a resistor is not used).

- **If all inputs are high**, both Q2 and Q3 conduct and saturate.
- The base voltage of Q1 is equal to the voltage across its base-collector pn junction plus two VBE drops in Q2 and Q1, or about 0.7 x 3 = 2.1 V.
- Since all inputs are high and greater than 2.4 V, the base-emitter junctions of Q1 are all reverse biased.
- When output transistor Q3 saturates (provided that it has a current path), the output voltage goes low to 0.2 V. This confirm s the conditions of a NAND operation

Effect of open collector without external resistor

- The open-collector TTL gate will operate without the external resistor when connected to inputs of other TTL gales although this kind of operation is not recommended because of the low noise immunity encountered.
- Without an external resistor, the output of the gate will be an open circuit when Q3 is off.
- An open circuit to an input of a TTL gate behaves as if it has a high level input (but a small amount of noise can change this to a low level).
- When Q3 conducts, its collector will have a current path supplied by the input of the loading gate through Vcc. the 4-k ohm resistor, and the forward-biased base-emitter junction.

2. TOTLEM POLE OUTPUT

- The output impedance of a gate is normally a resistive plus a capacitive load.
- The capacitive load consists of the capacitance of the output transistor, the capacitance of the fan-out gates and any stray wiring capacitance.
- When the output changes from the low to the high state, the output transistor of the gate goes from saturation to cutoff and the total load capacitance C charges exponentially from the low to the high voltage level with a time constant equal to RC
- For the open-collector gate, R is the external resistor marked RL.
- For a typical operating value of C = 15 pF and RL = 4 Kohm.
- the propagation delay of a TTL open-collector gate during the turnoff time is 35 ns.
- With an active pull-up circuit replacing the passive pull-up resistor RL, the propagation delay is reduced to 10 ns.

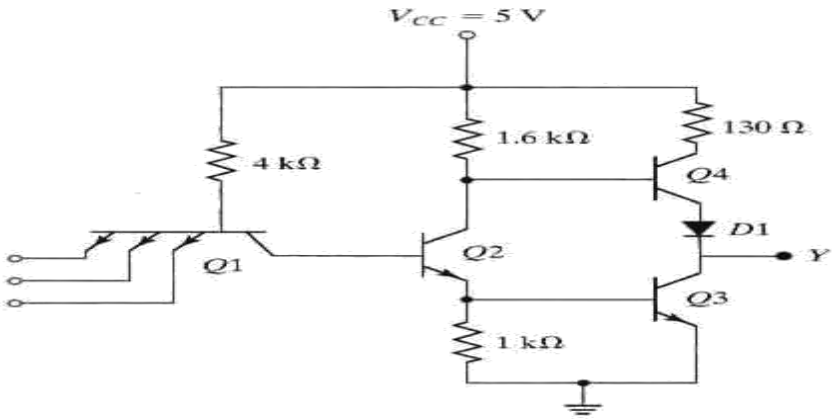

Fig 2. TTL gate with totem pole output

Operation of Totem pole TTL

- When the output Y is in the low state, Q2 and Q3 are driven into saturation as in the open-collector gate.
- The voltage in the collector of Q2 is VBE(Q3) + VCE (Q2) or 0.7 + 0.2 = 0.9 V. The output Y = VCE(Q3) = 0.2 V. Transistor Q4 is cut off because its base must be one VBE drop plus one diode drop, or 2 x 0.6 =1.2 V to start conducting.

- Since the collector of Q2is connected to the base of Q4, the latter's voltage is only 0.9 V instead of the required 1.2 V. so Q4 is cut off.
- The reason for placing the diode in the circuit is to provide a diode drop in the output path and thus ensure that Q4 is cut off when Q3 is saturated.
- When the output changes to the high state because one of the inputs drop to the low state, transistors Q2 and Q3 go into cutoff.
- However, the output remains momentarily low because the voltages across the load capacitance cannot change instantaneously.
- As soon as Q2 turns off. Q4 conducts, because its base is connected to Vcc through the 1.6-K ohm resistor.
- The current needed to charge the load capacitance causes Q4 to saturate momentarily and the output voltage rises with a time constant RC.
- But R in this case is equal to 130 n, plus the saturation resistance of Q4, plus the resistance of the diode, for a total of approximately 150ohm.
- This value of R is much smaller than the passive pull-up resistance used in the open-collector circuit. As a consequence, the transition from the low to high level is much faster.
- As the capacitive load charges, the output voltage rises and the current in Q4 decreases, bringing the transistor into the active region.
- Thus, in contrast to the other transistors, Q4 is in the active region when Q4 is in a steady -state condition.
- The final value of the output voltage is then 5 V, minus a VBE drop in Q4,minus a diode drop in DJ to about 3.6 V.
- Transistor Q3 goes into cutoff very fast, but during the initial transition time, both Q3 and Q4 are on and a peak current is drawn from the power supply.
- This current spike generates noise in the power-supply distribution system.
- When the change of state is frequent, the transient-current spikes increase the power-supply current requirement and the average power dissipation of the circuit increases.

3. SCHOTTKY TTL

- Propagation delay is reduced by eliminating saturation by placing Schottky diode between the base and collector of each saturated transistor in the circuit
- The Schottky diode is formed by the junction of a metal and semiconductor

- The voltage across a conducting Schottky diode is only 0.4 V.

- The presence of a Schottky diode between the base and collector prevents the transistor from going into saturation. The resulting transistor is called a Schottky transistor. The use of Schottky transistors in a TTL shown in figure 3 decreases the propagation delay without sacrificing power dissipation.

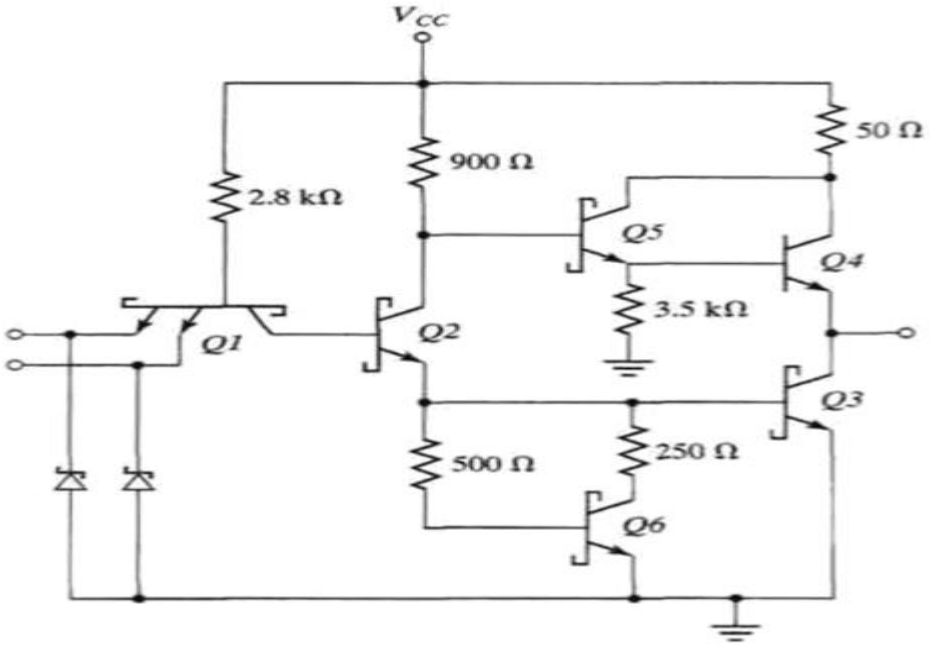

Fig 3.Schottky TTL gate

- Two new transistors, Q5 and Q6, have been added, and Schottky diodes are inserted between each input terminal and ground. There is no diode in the totem-pole circuit. However. the new combination of Q5 and Q4 still gives the two VBE drops necessary to prevent Q4 from conducting when the outpu t is low. This combination constitutes a double emitter-follower called a **Darlington pair**.

- The Darlington pair provides a very high current gain and extremely low resistance, exactly what is needed during the low-to-high swing of the output, resulting in a decrease in propagation delay.

Effect of diodes

- The diodes in each input shown in the circuit help clamp any ringing that may occur in the input lines. Under transient switching conditions, signal lines appear inductive; this, along with stray capacitance, causes signal s to oscillate, or **'ring**.'

- When the output of a gate switches from the high to the low state, the ringing waveform at the input may have excursions as great as 2-3 V below ground, depending on the line length.
- The diodes connected to ground help clamp this ringing, since they conduct as soon as the negative voltage exceeds 0.4 V.
- When the negative excursion is limited, the positive swing is also reduced.
- Clamp diodes have been so successful in limiting line effects that all versions of TTL gates use them
- Turn off is reduced by transistor Q6 and two resistors

Summary of TTL logic families:

Transistor-Transistor Logic Families are classified as following:

(a) Early TTL families
• 74L Low power

• 74H High speed

(b) Schottky TTL families
• 74S Schottky

• 74LS Low power Schottky

• 74AS Advanced Schottky

• 74ALS Advanced Low power Schottky

• 74F Fast

(a) Early TTL families:

- The original TTL family of logic gates was introduced by Sylvania in 1963. It was popularized by Texas Instruments, whose '7400-series' part numbers for gates and other TTL components quickly became an industry standard.
- As in 7400-series CMOS, devices in a given TTL family have part numbers of the form 74FAM*nn*, where 'FAM' is an alphabetic family mnemonic and *nn* is a numeric function designator. Devices in different families with the same value of *nn* perform the same function.
- In the original TTL family, 'FAM' is null and the family is called 74-series TTL.
- The 74H (High speed TTL) family used lower resistor values to reduce propagation delay at the expense of increased power consumption.
- The 74L (Low-power TTL) family used higher resistor values to reduce power consumption at the expense of propagation delay.

(b) Schottky TTL families:

- The first family to make use of Schottky transistors was 74S (Schottky TTL). With Schottky transistors and low resistor values, this family has much higher speed, but higher power consumption, than the original 74-series TTL.

- 74LS (Low-power Schottky TTL), introduced shortly after 74S. By combining Schottky transistors with higher resistor values, 74LS TTL matches the speed of 74-series TTL but has about one-fifth of its power consumption.
- Thus, 74LS is a preferred logic family for new TTL designs. Subsequent IC processing and circuit innovations gave rise to two more Schottky logic families as 74AS (Advanced Schottky TTL) and 74ALS (Advanced Low-power Schottky TTL).
- The 74AS (Advanced Schottky TTL) family offers speeds approximately twice as fast as 74S with approximately the same power consumption.
- The 74ALS (Advanced Low-power Schottky TTL) family offers both lower power and higher speeds than 74LS, and rivals 74LS in popularity for general-purpose requirements in new TTL designs.
- The 74F (Fast TTL) family is positioned between 74AS and 74ALS in the speed/power tradeoff, and is probably the most popular choice for high-speed requirements in new TTL designs.

Characteristics of TTL logic families:

- The important characteristics of TTL families are summarized in Table below.
- The first two rows of the table list the propagation delay (in nanoseconds) and the power consumption (in milliWatts) of a typical 2-input NAND gate in each family.
- One figure of merit of a logic family is its *speed-power product* listed in the third row of the table.
- The remaining rows have values of voltage levels for all TTL families.

	74	74S	74LS	74AS	74ALS	74F
Performance ratings						
Propagation delay (ns)	9	3	9.5	1.7	4	3
Power dissipation (mW)	10	20	2	8	1.2	6
Max. clock rate (MHz)	35	125	45	200	70	100
Fan-out (same series)	10	20	20	40	20	33
Speed-Power product(pj)	90	60	19	13.6	4.8	18
Voltage parameters						
V_{OH}(min) (V)	2.4	2.7	2.7	2.5	2.5	2.5
V_{OL}(max) (V)	0.4	0.5	0.5	0.5	0.5	0.5
V_{IH}(min) (V)	2.0	2.0	2.0	2.0	2.0	2.0
V_{IL} (max) (V)	0.8	0.8	0.8	0.8	0.8	0.8

ECL Logic families:

- TTL Family operates the Transistor in deep saturation mode, results the limitation of Switching speed by Storage delay time.
- To overcome this limitation, another circuit structure is used called Current Mode Logic. This logic family also called as Emitter Coupled Logic.

ECL Characteristics:

- It is fastest logic family because Propagation delay is short.
- For 10k, 100k families it is 1ns,for latest ECL it is 500ps.
- Preventing Transistor from deep saturation by keeping logic levels close to each other.
- Eliminates the storage delays & increases the Switching Speed.
- Noise margin is reduced, it is difficult to achieve good noise immunity.
- Power consumption is more because transistors are not in complete saturation.
- Switching Transients are less, because power supply current is more stable than TTL, CMOS.

ECL 10K series NOR/OR gate:

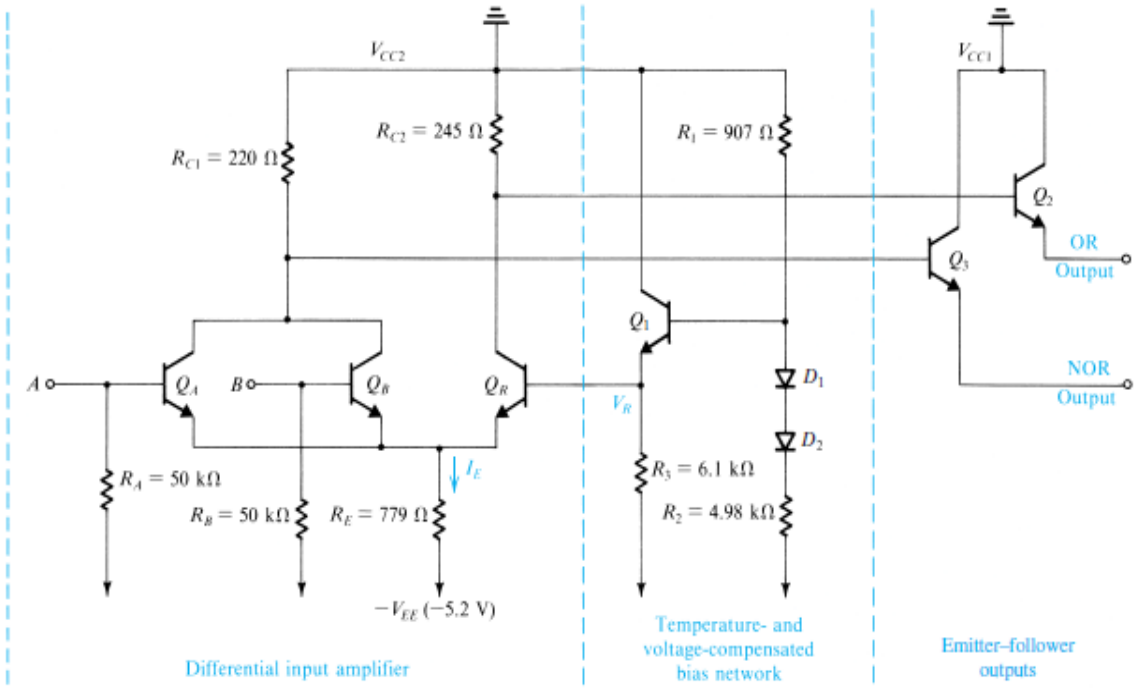

The basic gate circuit of the ECL 10K family is shown in Fig. above. The circuit consists of three parts. The network composed of *Q*1, *D*1, *D*2, *R*1, *R*2, and *R*3 generates a reference voltage *VR* whose value at room temperature is –1.32 V. As will be shown, the value of this reference voltage is made to change with temperature in a predetermined manner to keep the noise margins almost constant. Also, the reference voltage *VR* is made relatively insensitive to variations in the power-supply voltage *VEE*.

The second part, and the heart of the gate, is the differential amplifier formed by *QR* and either *QA* or *QB*. This differential amplifier is biased not by a constant-current source , but with a resistance *RE* connected to the negativesupply−*VEE*. Nevertheless, we will shortly show that the current in *RE* remains approximately constant over the normal range of operation of the gate. One side of the differential amplifier consists of the reference transistor *QR*, whose base is connected to the reference voltage *VR*.

The other side consists of a number of transistors (two in the case shown), connected in parallel, with separated bases, each connected to a gate input. If the voltages applied to *A* and *B* are at the logic-0 level, which, as we will soon find out, is about 0.4 V below *VR*, both *QA* and *QB*, will be off and the current *IE* in *RE* will flow through the reference transistor *QR*. The resulting voltage drop across *RC*2 will cause the collector voltage of *QR* to be low.

On the other hand, when the voltage applied to *A* or *B* is at the logic-1 level, which is about 0.4 V above *VR*, transistor *QA* or *QB*, or both, will be on and *QR* will be off. Thus the current *IE* will flow through *QA* or *QB*, or both, and an almost equal current will flow through *RC*1. The resulting voltage drop across *RC*1 will cause the collector voltage to drop. Meanwhile, since *QR* is off, its collector voltage rises. We thus see that the voltage at the collector of *QR* will be high if *A* or *B*, or both, is high, and thus at the collector of *QR*, the OR logic function, *A*+*B*, is realized.

On the other hand, the common collector of *QA* and *QB* will be high only when *A* and *B* are simultaneously low. Thus at the common collector of *QA* and *QB*, the logic function (*A*+*B*)′ is realized. We therefore conclude that the two-input gate of Fig. above realizes the OR function and its complement, the NOR function.

The third part of the ECL gate circuit is composed of the two emitter followers, *Q*2 and *Q*3. The emitter followers do not have on-chip loads, since in many applications of high-speed logic circuits the gate output drives a transmission line terminated at the other end.

The emitter followers have two purposes: First, they shift the level of the output signals by one *VBE* drop. Thus, that the output levels become approximately –1.75 V and –0.75 V. These shifted levels are centered approximately around the reference voltage (*VR*= −1.32 V), which means that one gate can drive another. This compatibility of logic levels at input and output is an essential requirement in the design of gate circuits.

The second function of the output emitter followers is to provide the gate with low output resistances and with the large output currents required for charging load capacitances.

This ECL family has 100XXX(100101,100107,100170) part numbers. This family differs with 10k family in many aspects which are mentioned in table below.

PARAMETERS	ECL 10K	ECL 100K
Power Supply Voltage	- 5.2 v	- 4.5v
Propagation delay	2 ns	0.75 ns
Transition times	1.75 ns	0.70 ns
Power Consumption	20 mW	40 mW

CMOS Technology:

CMOS inverter: A very effective logic circuit with high input impedance, fast switching speeds, and lower operating power levels can be obtained by constructing p channel and n channel MOSFETS on a same substrate. This configuration is called complementary MOSFET arrangement. A complementary MOS (CMOS) inverter is implemented as the series connection of a *p*-device and an *n*-device, as shown in Figure 4. Note that the source and the substrate of the *p* -device is tied to the V_{DD} rail, while the source and the substrate(V_{SS} or GND) of the *n*-device are connected to the ground bus and drain terminals of both devices are connected to the output Vo.

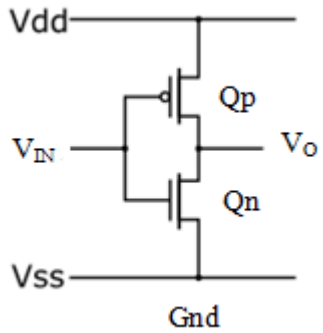

Figure 4:CMOS Inverter

An inverter is a circuit that inverts the applied signal. That is, if the logic levels of operation are 0V and 5V, an input level of 5V will result in output level of 0V and vice versa. For logic levels defined above, application of 5V at the input V_{IN}, V_{GS} of Qn=5V and Qn is on, resulting in low resistance between drain and source. Since VIN and VSS are at 5V, V_{GS} of

Qp=0V, and hence Qp is off. The resulting resistance level between drain and source is quite high for Qp. Hence Vo becomes 0V establishing inversion process. For an applied voltage V_{IN} of 0V, V_{GSN}=0V and Qn will be off and V_{GSP}=-5V, turning on the p channel MOSFET. The result is that Qp will present a small resistance , Qn a high resistance level, and Vo= 5V.

VIN	Qn	Qp	Vo
0V(LOW)	OFF	ON	5V(HIGH)
5V(HIGH)	ON	OFF	0V(LOW)

CMOS Inverter DC output characteristic and Noise margin Calculation:

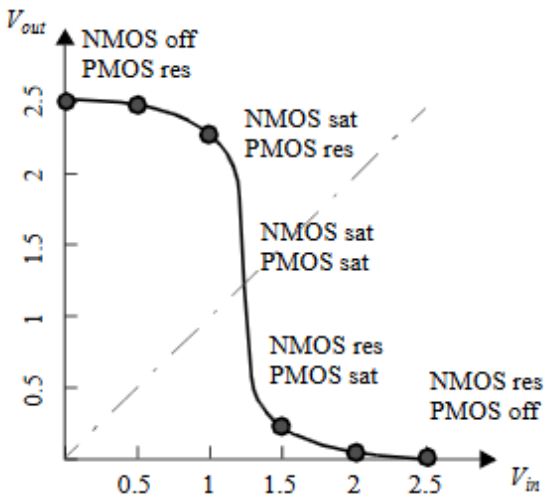

Figure VTC of static CMOS inverter, derived from Figure 5.4 (V_{DD} = 2.5 V). For each operation region, the modes of the transistors are annotated – off, res(istive), or sat(urated).

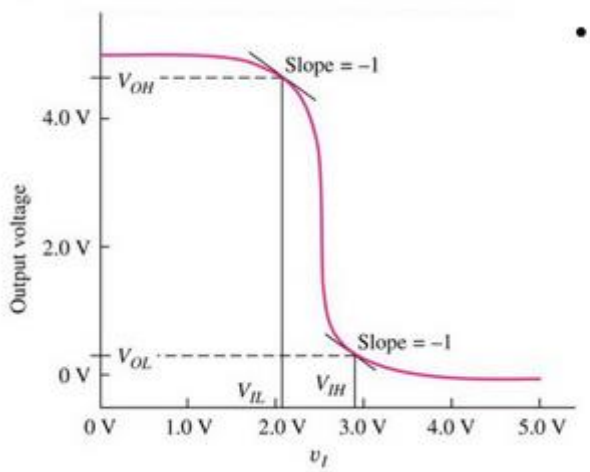

- Noise margins are defined by the regions shown in the given figure

$NM_L = V_{IL} - V_{OL}$

$NM_H = V_{OH} - V_{IH}$

THE CMOS NAND GATE:

The schematic diagram of a 2-input CMOS NAND gate is shown in Figure.5. It can be seen that in this structure, the n-type driving transistors are connected in series while the p-type load transistors are connected in parallel. Transistors are a driven in n-type cum p-type pairs with one transistor ON while the other is OFF. A table of the conducting states of the transistors for all logic combinations of the inputs is given below.

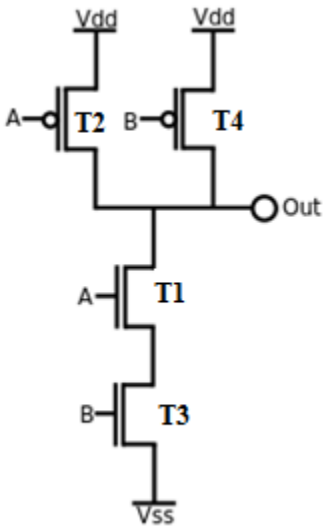

Figure 5 CMOS NAND gate

IN A	IN B	T_1	T_2	T_3	T_4	OUT
LO	LO	OFF	ON	OFF	ON	HI
LO	HI	OFF	ON	ON	OFF	HI
HI	LO	ON	OFF	OFF	ON	HI
HI	HI	ON	OFF	ON	OFF	LO

THE CMOS NOR GATE:

The schematic diagram of a 2-input CMOS NOR gate is shown in Figure.6. It can be seen that similar to NAND gate structure, the n-type driving transistors are connected in parallel while the p-type load transistors are connected in Series. Transistors are a driven in n-type

cum p-type pairs with one transistor ON while the other is OFF. A table of the conducting states of the transistors for all logic combinations of the inputs is given below.

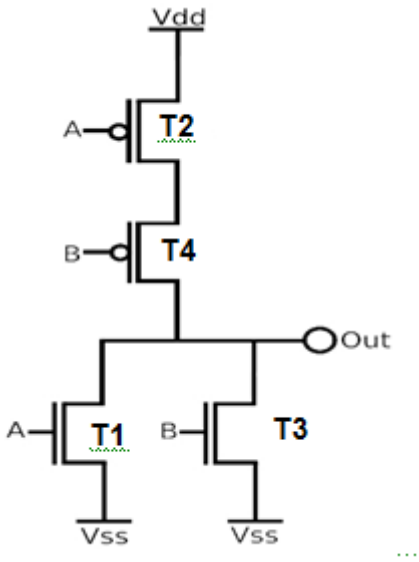

Figure 6 CMOS NOR gate

A	B	T1	T2	T3	T4	OUT
LO	LO	OFF	ON	OFF	ON	HI
LO	HI	OFF	ON	ON	OFF	LO
HI	LO	ON	OFF	OFF	ON	LO
HI	HI	ON	OFF	ON	OFF	LO

Comparisons among CMOS, TTL and ECL logic circuits:

S.No	PARAMETER	CMOS	TTL	ECL
1	Device Used	nMOS, pMOS	BJT	BJT
2	$V_{IH(min)}$	3.5 V	2 V	-1.2 V
	$V_{IL(max)}$	1.5 V	0.8 V	-1.4 V
	$V_{OH(min)}$	4.95 V	2.4 V	-0.9 V
	$V_{OL(max)}$	0.005 V	0.4 V	-1.7 V
3	HIGH level Noise margin	1.45 V	0.4 V	0.3 V
4	LOW level Noise margin	1.45 V	0.4 V	0.3 V
5	Noise immunity	> TTL	< CMOS	More vulnerable to Noise
6	Propagation Delay	70 ns	10 ns	500 ps
7	Switching Speed	< TTL	>> CMOS	Fastest
8	Power Dissipation/Gate	0.1 mW	10 mW	25 mW
9	Speed-Power Product	0.7 pJ	100 pJ	0.5 pJ
10	Fan-out	50	10	25
11	Power Supply Voltage	3-15 V	Fixed 5V	-4.5 V to -5.2 V
12	Power Dissipation	Increase with f	Increase with f	Constant with f
13	Application	Portable Instruments (Battery Supply)	Laboratory Instruments	High Speed Instruments

Characteristics and Performance Parameters of CMOS Inverter

This unit deals with basics of digital gate properties, introduction to IC's, digital logic families.

Digital gate Properties:

- Logic noise margin
- Propagation delay
- Fan-In/ Fan-Out
- Current sinking/sourcing
- Power dissipation
- Figure of Merit

a) logic voltage levels logic voltage levels and DC noise margin :

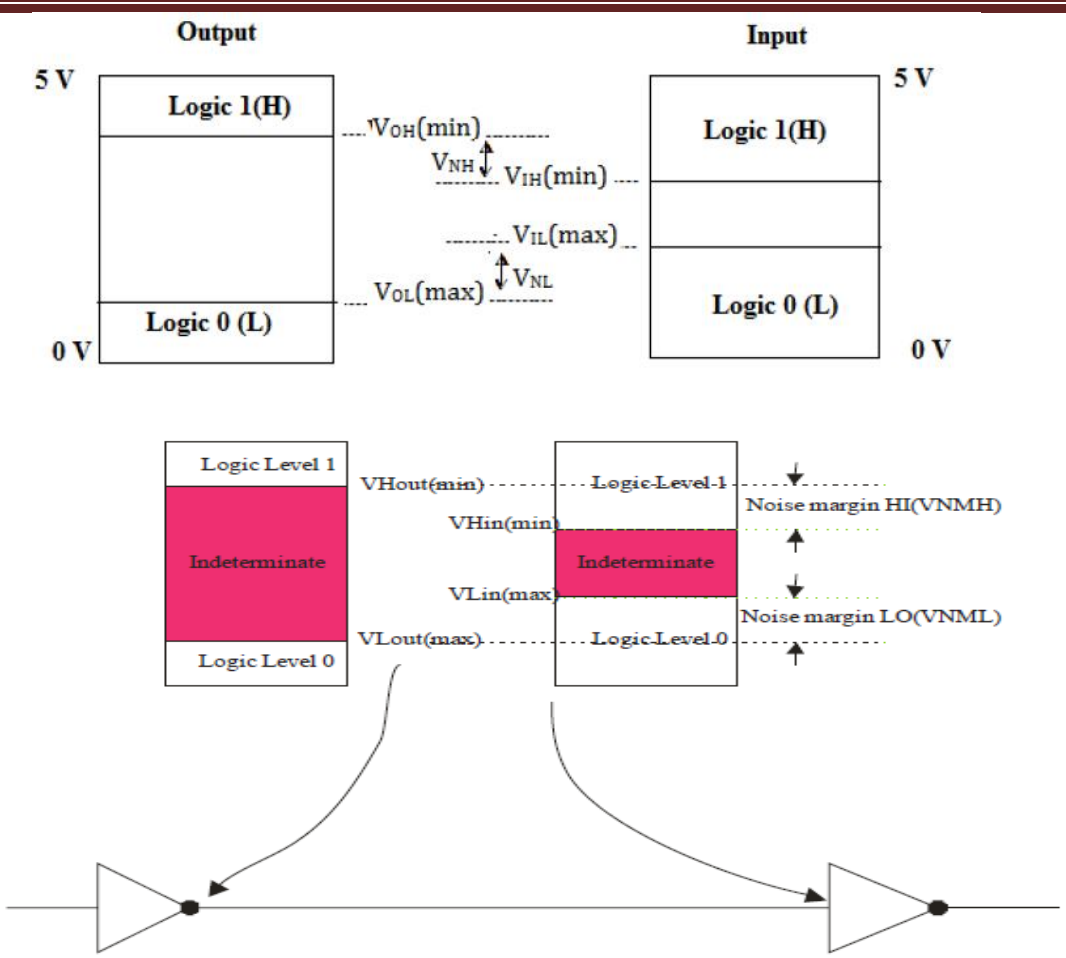

High Level Input Voltage (VIH(min)): It is the minimum voltage required for a logic '1' at an input. Any voltage below this level will not be accepted as HIGH by logic Circuit.

High Level Output Voltage (VOH(min)): It is the minimum voltage required for a logic '1' at an Output under defined load conditions.

Low Level Input Voltage (VIL(max)): It is the maximum voltage required for a logic '0' at an input. Any voltage above this level will not be accepted as LOW by logic Circuit.

Low Level Output Voltage (VOL(max)): It is the maximum voltage required for a logic '0' at an Output under defined load conditions.

Noise Margin:

In practice sometimes unwanted signals called noise may occur by droping input voltage less than VIH(min) and rise above the VIL(max).

To avoid this we kept VOH(min), VOL(max) to certain fraction of voltages below and above respectively. These limits are called DC Noise margins.

DC noise margin allows digital circuit to function properly.

The noise margin in HIGH state is VNH= VOH(min) – VIH(min)

The noise margin in LOW state is VNL= VIL(max) – VOL(max)

Similarly current parameters can also specified as

High Level Input Current (IIH): It is the current that flows into input when a specified high level voltage is applied to input.

High Level Output Current (IOH): It is the current that flows from an Output under specified load conditions.

Low Level Input Current (IIL): It is the current that flows into input when a specified low evel voltage is applied to input.

Low Level Output Current (IOL): It is the current that flows from an Output under specified load conditions.

b) Fan-Out/Fan -In:

- The fan-out in logic gate is number of inputs that the gate can drive without exceeding its worst case loading specifications.
- Fan-Out depends not only on the output characteristics but also on inputs that it is driving
- The LOW state and HIGH state fan-outs of a gate may not be equal.
- The Fan-In is the number of allowable inputs to the gate.

The fan-out of the gate is represented by:

$$\frac{I_{OH}}{I_{IH}} \text{ or } \frac{I_{OL}}{I_{IL}}$$

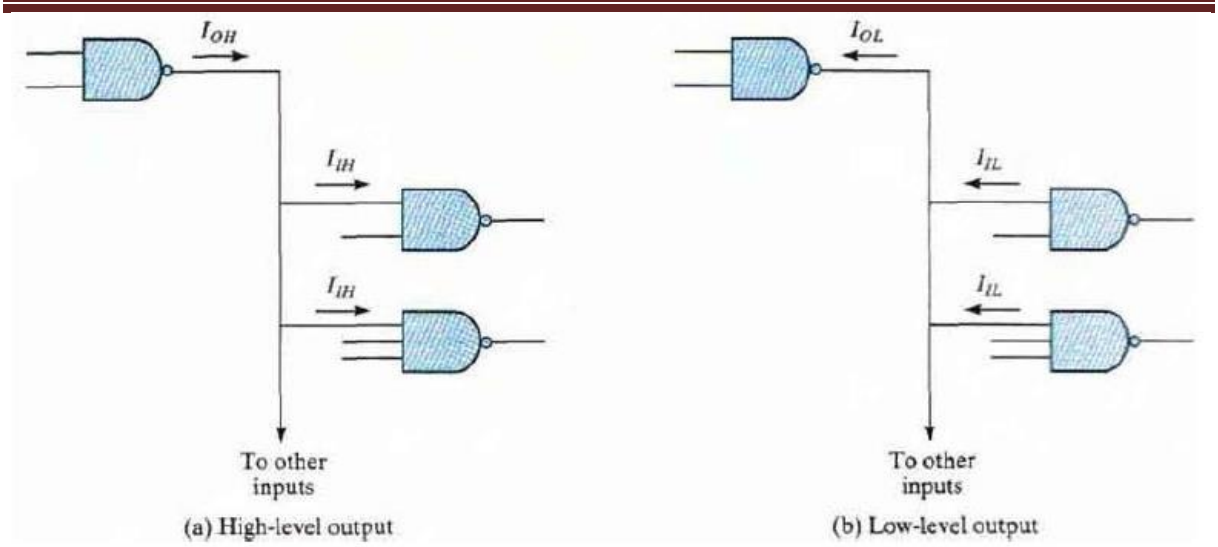

For example, the standard TTL gates have the following values for the currents I_{OH}= 400 p.A , I_{LH} = 40 p.A, I_{OL} = 16 mA, I_{IL} = I.6 mA then, the fanout of a gate is,

$$Fanout = \frac{I_{OH}}{I_{IH}} = \frac{I_{OL}}{I_{IL}} = \frac{400\mu A}{40pA} = \frac{16\mu A}{1.6pA} = 10$$

c) **Sinking Current(IOL(max)):** The maximum current that the output can sink in the low state while still maintaining an output voltage smaller than VOL(Max).
Sourcing Current(IOH(max)): The maximum current that the output can source/ supply in the high state while still maintaining an output voltage greater than VOH(Min).

Effects of loading: The basic loading effects on output are

- In the low state, the output voltage(VOL)may increase beyond VOL(max).
- In the high state, the output voltage(VOH)may fall beyond VOH(min).
- Propagation delay may increase beyond specifications.
- Output rise and fall times may increase beyond specifications.
- The Operating temperature may increase there by reducing reliability, It may also Cause device failure.

d.Propagation Delay:

- It is the amount of time that it takes for a change in input signal to produce a change in output signal.
- That is propagation delay of a gate is basically time interval between application of input and occurrence of output signal.
- Propagation delay is an important characteristics because it limits the speed at which it operates.
- Propagation delay is inversely proportional to speed. Propagation delay determines using 2 intervals as tPLH and tPHL.
- tPLH is delay time measured when output is changing from logic '0' to logic '1' state.
- tPHL is delay time measured when output is changing from logic '1' state to logic '0' state.
- The Propagation delay is given by tP= max(tPLH , tPHL), but some times it will be measured as average of tPLH and tPHL, as (tPLH + tPHL)/2

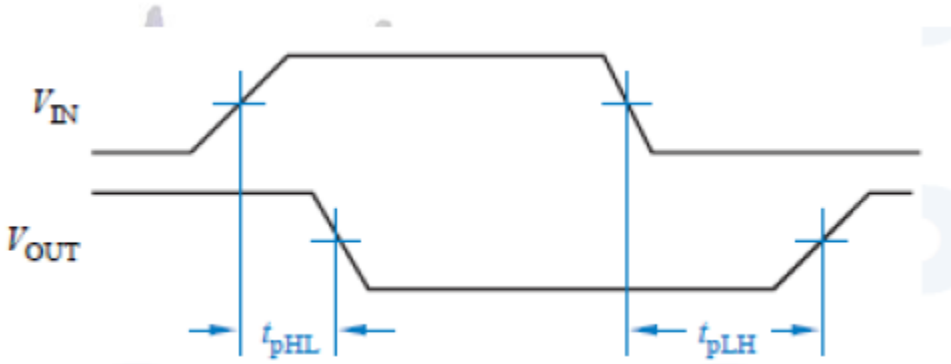

e. Power Consumption:

- When a CMOS output changes from Low to High, a transient charging current is supplied to load capacitance which may cause increase in frequency that leads to increase in power consumption by increased average current drawn from VDD.
- The power consumption of a CMOS circuit whose output is not changing is called *static power dissipation* or *quiescent power dissipation.*
- A CMOS circuit consumes significant power only during transitions is called *dynamic power dissipation.*
- Power consumption during transitions is given by $PT = C_{PD} \times VDD^2 \times f$

where PT --- Internal power dissipation during transitions
VDD--- Power supply voltage.
C_{PD} --- Power dissipation capacitance

- Power consumption due to capacitive load is given by PL = CL x (VDD^2/2) x2 f. (since 2 transitions/sec). Simplified equation is PL = CL x VDD^2 x f

f. Figure of merit

It is also known as power delay product. It is a product of power dissipation and propogation delay.

Integrated circuit: A collection of one or more gates fabricated on a single silicon chip is called an *Integrated Circuit(IC)* or it can be defined as an Integrated Circuit(IC) is a silicon wafer or a Die that contains two or more number of active such as diodes, transistors and some of passive components such as resistors, capacitors.

History of IC:

- There are many ways are available to design electronic logic circuit. First electrically controlled logic circuits were developed in 1930s at Bell laboratories based on relays.
- The first electronic digital computer named as ENIAC was developed in mid 1940s based on vacuum tubes. It has 100 feet long, 10 feet height, 3 feet deep and consumed 140kw of power.
- By the invention of semiconductor diode and transistor after 1947 smaller, faster and more capable computers were designed.
- Better computers are designed by the invention of ICs which allowed multiples diodes, transistors and other components to be fabricated on a single chip of silicon in 1960s.
- The first IC family was introduced in 1960.

Classification of Digital ICs: Based on the size or number of logic components/gates fabricated per chip the ICs are classified into different Integrations as

Small Scale Integration (SSI): It have less than 100 components (about 10 gates).

Medium Scale Integration (MSI): It contains between 100-1000 components or have more than 10 but less than 100 gates.

Large Scale Integration (LSI): Here number of components is between 1000 and 10000 or have gates between 100-1000.

Very Large Scale Integration (VLSI): It contains components between 10000-100000 per chip or gates between 1000-10000 per chip.

Ultra Large Scale Integration (ULSI): It contains more than 100000 components per chip.

Giant Scale Integration (GSI): It contains much more than 2000000 components per chip.

Simplification Techniques

Karnaugh Maps:

Minterm: Each fundamental product term occupies a single cell in theKarnaugh map and is called a „*minterm*' (as it specifics the minimum area of l's, i.e. a single cell in a SOP representation) in the Karnaugh map. A minterm is also called as an implicant.

Maxterm: Each fundamental sum term occupies a single cell in theKarnaugh map and is called a „*minterm*' in the Karnaugh map (it is the dual of the minterm, i.e. a single cell in POS representation). A minterm is also called as an implicant.

Prime implicants (PI): A '*prime implicant*' is a product term obtained bycombining the maximum possible number of minterms from adjacent squares in the map. Once the minterms are looped and grouped in the minimization process, it forms duals (pairs), quads and octets. The duals (pairs), the quads and the octets are therefore called prime implicants.

Essential prime implicants(EPI): An '*essential prime implicant*' is a primeimplicant that includes at least one minterm which is not covered by any other prime implicant. In order to minimize a function all of the minterms in the K-map must be covered (i.e. grouped and looped), since they must be contained in the minimized Boolean expression. However, if all of the possible groups, that is the prime implicants, are used in the final minimized sum of product expression there may be more of them than are strictly necessary to cover the whole map. Those prime implicants which describe product terms which must be used for all minterms to be covered are called essential prime implicants.

X	$\bar{A}\bar{B}$	$\bar{A}B$	AB	$A\bar{B}$
$\bar{C}\bar{D}$	0	0	1	0
$\bar{C}D$	0	1	1	0
CD	0	1	1	0
$C\bar{D}$	1	1	0	0

Y	$\bar{A}\bar{B}$	$\bar{A}B$	AB	$A\bar{B}$
$\bar{C}\bar{D}$	0	0	1	0
$\bar{C}D$	1	1	1	1
CD	1	0	1	0
$C\bar{D}$	1	0	1	1

K-map example

The map for X contains four prime implicants: the quad, BD; and duals ABC', A'BC and A'CD'. However, only three of these are essential prime implicants since A'BC is also covered by BD and A'CD'. The minimized expression is therefore

$$X = BD + ABC' + A'CD'$$

The map for Y contains six prime implicants: the quads C'D and AB; and duals A'B'D, A'B'C, ACD' and B'CD'. Only two of these are essential prime implicants, namely' AB and C'D. The remaining three minterms A'B'CD, A'B'CD' and AB'CD' must also be covered by choosing appropriate non-essential prime implicants from the four remaining. This can be achieved a number of ways, any of which provide a complete and therefore adequate minimized expression. These are

$$Y = C'D + AB + A'B'D + B'CD'$$

$$Y = C'D + AB + A'B'C + B'CD'$$

$$Y = C'D + AB + A'B'C + ACD'$$

Redundant groups: The map for Y below contains three prime implicantsAB, A"C and BC. Of these AB and A"C are essential prime implicants with BC non-essential or redundant, since it is also covered by these two.

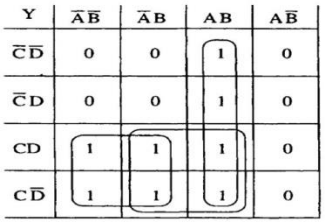

Y	$\bar{A}\bar{B}$	$\bar{A}B$	AB	$A\bar{B}$
$\bar{C}\bar{D}$	0	0	1	0
$\bar{C}D$	0	0	1	0
CD	1	1	1	0
$C\bar{D}$	1	1	1	0

K-map example

Therefore, the minimized form is $Y = AB + A'C$

1. Simplify using K-Map

(a) (i) F (A, B, C, D) = Σ (1, 4, 5, 6, 12, 14, 15, 16)

F (A, B, C, D) = BC'D' + A'C'D + BCD' + ABC

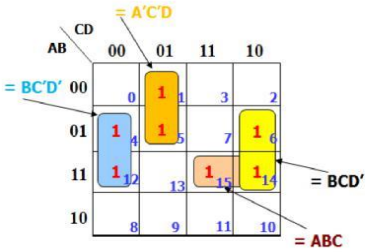

(a) (ii) F (A, B, C, D) = Σ (0, 1, 2, 4, 5, 7, 11, 15)

F (A, B, C, D) = A'B'D' + A'C' + A'BD + ACD

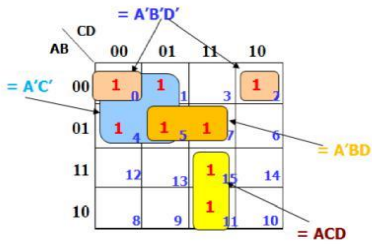

(a) (iii) F (A, B, C, D) = Σ (2, 3, 10, 11, 12, 13, 14, 15)

F (A, B, C, D) = A'B'C' + AC + AB

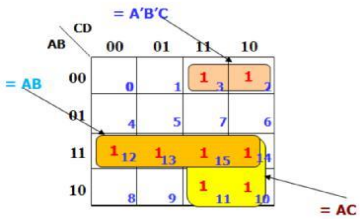

(a) (iv) F (A, B, C, D) = Σ (0, 2, 4, 5, 6, 7, 8, 10, 13, 15)

F (A, B, C, D) = B'D' + A'C'D + BCD' + ABC

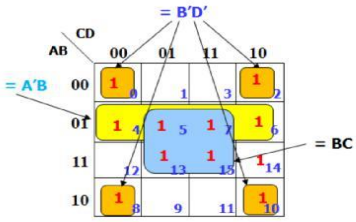

K-map for example-1

2. Simplify using K-map f(A,B,C,D) =∑*m*(2,3,4,5,7,8,10,13,15)

Soln:

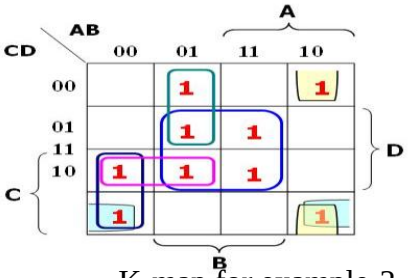

K-map for example-2

Don't-care Conditions:

No.	A	B	C	D	P
0	0	0	0	0	1
1	0	0	0	1	0
2	0	0	1	0	0
3	0	0	1	1	1
4	0	1	0	0	0
5	0	1	0	1	1
6	0	1	1	0	1
7	0	1	1	1	0
8	1	0	0	0	0
9	1	0	0	1	1
10	1	0	1	0	X
11	1	0	1	1	X
12	1	1	0	0	X
13	1	1	0	1	X
14	1	1	1	0	X
15	1	1	1	1	X

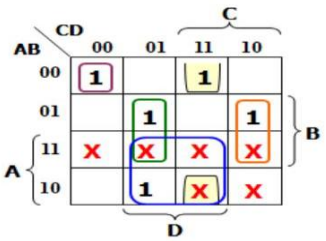

K-map with don't cares

P = A'B'C'D' + B'CD + BC'D + BCD' + AD

Getting POS Expressions: Simplified POS expression can be obtainedby grouping the maxterms (i.e. 0s) of given function. Given F=∑m(0,1,2,3,5,7,8,9,10,11), we first draw the K-map, then group the maxterms together

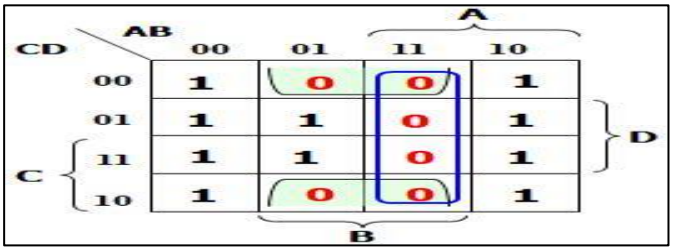

K-map for POS expression

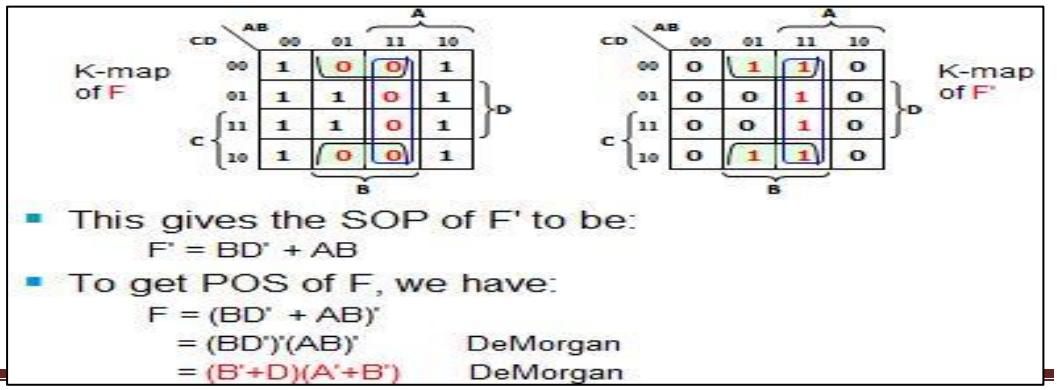

K-map for POS expression

The rules for using Karnaugh maps are as follows:

i. Draw the map, remembering the 'pattern' when filling from a truth table.

ii. Loop all octets, quads and duals (groups of eight, four and two adjacent minterms). These are the prime implicants. It does not matter if some minterms are covered more than once, although duals should not be totally enclosed in quads, and quads in octets as this simply means full minimization has not been performed.

iii. Remember the map can be 'rolled' across its edges, or across the two maps in the case of a five-variable map.

iv. Rememberthat you can set 'don't care' or 'can't happen' terms to either 0 or 1 to aid minimization.

v. Determine which prime implicants are essential and so must be used in the minimized sum of products expression.

vi. Pick enough prime implicants which together with the essential prime implicants already selected will cover the whole map. Other non-essential prime implicants need not be included in the minimized expression.

Also bear in mind:

i. Although the minimized expression is obtained it may not be the best expression for your particular problem (e.g. you may already have generated otherproduct terms, for some other circuit, which could be used).

ii. Look out for the characteristic XOR pattern that cannot be minimized but which is implemented easily using XOR gates.

iii. Do not forget that it is sometimes easier to minimize by inspection from thetruth table (i.e. a Karnaugh map may not offer the best route to minimization).

5-Variable K-maps

A 5-variable K-Map, which consists of 2^5 or 32 cells numbered from 0 to 31, is drawn as a group of two 4-variable K-Maps. The logic behind drawing two maps instead of a single map is that in any binary progression there are exactly half number of input combinations with MSB as '0' and the rest half with MSB as '1'. This also means that there are exactly half minterms / maxterms in any binary progression with MSB as '0' and the other half with MSB as '1',

Function	Number of Variables	Total Possible combinations	Minterms/Maxterms With MSB as '0' (a=0)	Minterms/Maxterms With MSB as '1'(a=1)
f(a,b)	2	4	0 to 1	2 to 3
f(a,b,c)	3	8	0 to 3	4 to 7
f(a,b,c,d)	4	16	0 to 7	8 to 15
f(a,b,c,d,e)	5	32	0 to 15	16 to 31
f(a,b,c,d,e,f)	6	64	0 to 31	32 to 63

Segregation of minterms/maxterms based on MSB

The K-Map of 5-variable function f(a, b, c, d, e) is divided into two 4-variable K-Maps (i) the 1st map of 4-variables b, c, d and e consisting of 16 cells corresponding to minterms/maxterms 0 to 15 with the MSB 'a' as 0 and (ii) the 2nd map of 4-variables b, c, d and e consisting of 16 cells corresponding to minterms/maxterms 16 to 31 with the MSB 'a' as 1. Similarly, a 4-variable K-Map can also be expressed as a group of two 3-variable K-Maps, but we don't do so as it is not very difficult to group minterms/maxterms in just 16 cells. Each cell in a 5-variable K-Map will have a maximum of five adjacent cells. For example the adjacent cells of a cell numbered 4, have been highlighted.

An important observation that we should make here is that any two cells whose decimal values differ by 16 are also adjacent cells. Theirlocations on the two maps will be exactly same. For example, cells (4, 20), (10, 26), (15, 31) etc. are therefore called adjacent cells and their binary representations differ only in the MSB position as shown below and therefore the MSB and its complement gets eliminated, when such cells are formed as a pair.

	↓		↓		↓
4=	00100/	10 =	01010/	15 =	01111/
20 =	10100/	26 =	11010/	31 =	11111/

Cell	Adjacent Cells	Cell	Adjacent Cells	Cell	Adjacent Cells	Cell	Adjacent Cells
0	1, 2, 4, 8, 16	**8**	0, 9, 10, 12, 24	**16**	0, 17, 18, 20, 24	**24**	8, 16, 25, 26, 28,
1	0, 3, 5, 9, 17	**9**	1, 8, 11, 13, 25	**17**	1, 16, 19, 21, 25	**25**	9, 17, 24, 27, 29
2	0, 3, 6, 10, 18	**10**	2, 8, 11, 14, 26	**18**	2, 16, 19, 22, 26	**26**	10, 18, 24, 27, 30
3	1, 2, 7, 11, 19	**11**	3, 9, 10, 15, 27	**19**	3, 17, 18, 23, 27	**27**	11, 19, 25, 26, 31
4	0, 5, 6, 12, 20	**12**	4, 8, 13, 14, 28	**20**	4, 16, 21, 22, 28	**28**	12, 20, 24, 29, 30
5	1, 4, 7, 13, 21	**13**	5, 9, 12, 15, 29	**21**	5, 17, 20, 23, 29	**29**	13, 21, 25, 28, 31
6	2, 4, 7, 14, 22	**14**	6, 10, 12, 15, 30	**22**	6, 18, 20, 23, 30	**30**	14, 22, 26, 28, 31
7	3, 5, 6, 15, 23	**15**	7, 11, 13, 14, 31	**23**	7, 19, 21, 22, 31	**31**	15, 23, 27, 29, 30

Adjacent Cells in a five variable K-Map

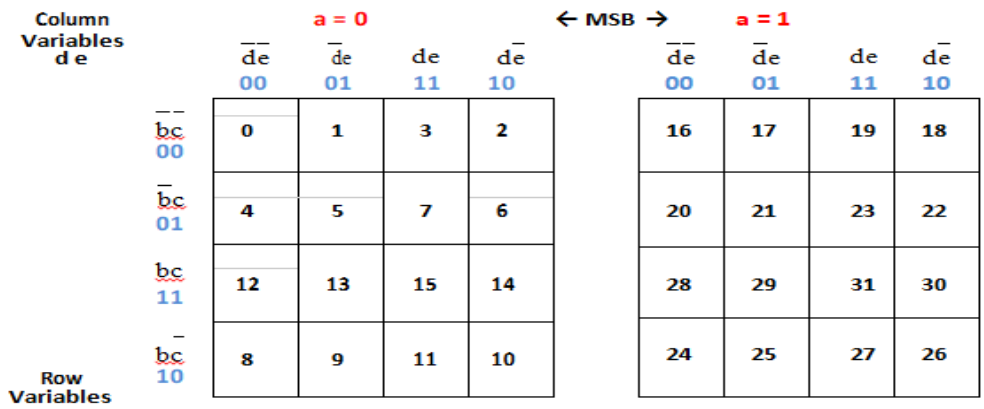

Five Variable K-Map

Let us see some examples of grouping the cells in a 5-variable map and the process of obtaining their reduced expressions. a 5-variable map where there is no matching terms i.e. minterms in the same locations, on both the maps. Observe in such a case that the variable 'a' appears, either in complemented form (if the group is present on the left side map) or un-complemented form (if the group is present on the right side map), in the reduced expression for every group. Except for this difference, the rules for obtaining the reduced expression are same as those of a 4-variable K-Map. Observe that the variable 'a' is missing in all the reduced expressions for the reason that the groups have been spread over two maps.

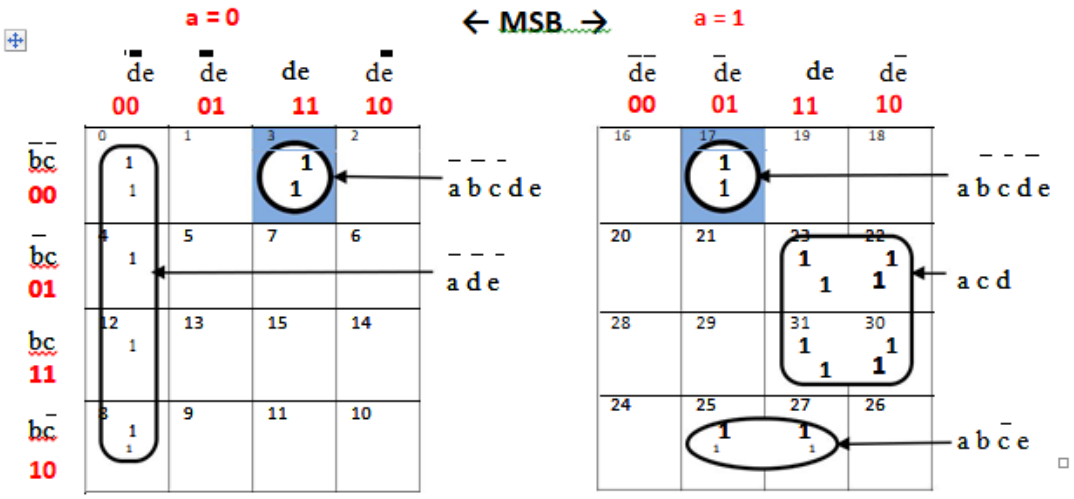

Five Variable K-Map without any matchingMinterms on both theMaps

For example, the reduced expression for the pair and quad in:

Pair

Minterms	→	1		17
Binary	→	0 0 0 0 1		1 0 0 0 1
Expression	→	$\bar{a}\,\bar{b}\,\bar{c}\,\bar{d}\,E$	+	$a\,\bar{b}\,\bar{c}\,\bar{d}\,\bar{e}$ = $b\,\bar{c}\,\bar{d}\,\bar{e}$

Quad

2	=	00010/	18	=	10010/
6	=	00110/	22	=	10110/
Expression	=	$a\bar{b}cde$			$a\bar{b}cde$
Reduced Expression	→	$\bar{a}\bar{b}\,d\bar{e}$	+		$a\bar{b}\,d\bar{e}$ = $bd\bar{e}$

It is easy to see that the octet in the 3rd row corresponds to the reduced expression 'bc', as it eliminates 3 variables. The following examples will reinforce the above concepts in a clear way.

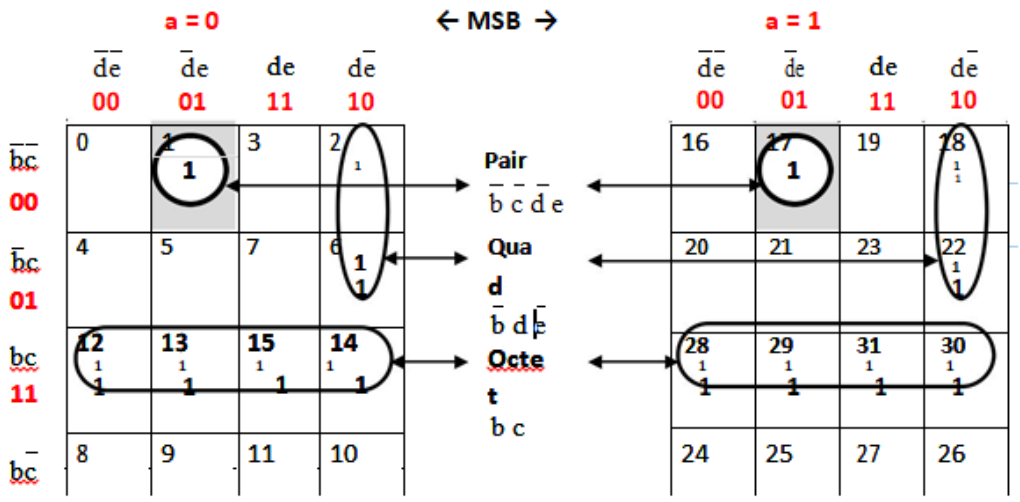

Five variable K-Map with matching Minterms on both the Maps

1. Simplify the following Boolean function and obtain the most optimal sumof products expression.

$$f(a,b,c,d,e) = \Sigma m\ (0, 1, 4, 5, 6, 7, 9, 12, 13, 14, 15, 16, 17, 20, 21, 22, 23, 25, 29)$$

Soln: The given minterms are mapped on to a 5-variable K-Map as in Fig.

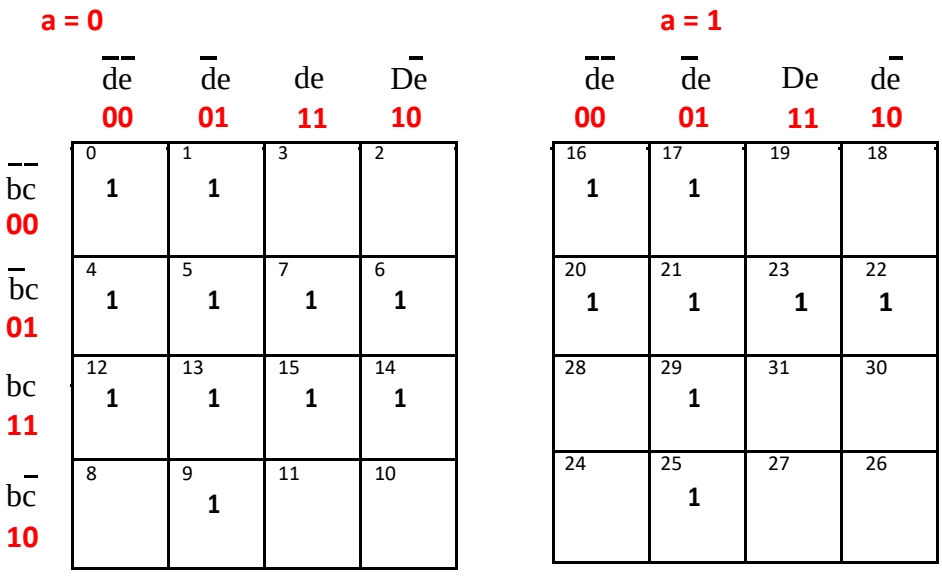

Five Variable K-Map for Example 1

First of all we should see if a group of minterms are available in the same locations on both the maps. Suppose we group cells (4, 5, 6, 7) as a quad, we see that it can be combined into

an octet with another group of cells (20, 21, 22, 23) which are exactly in the same locations on the other map,

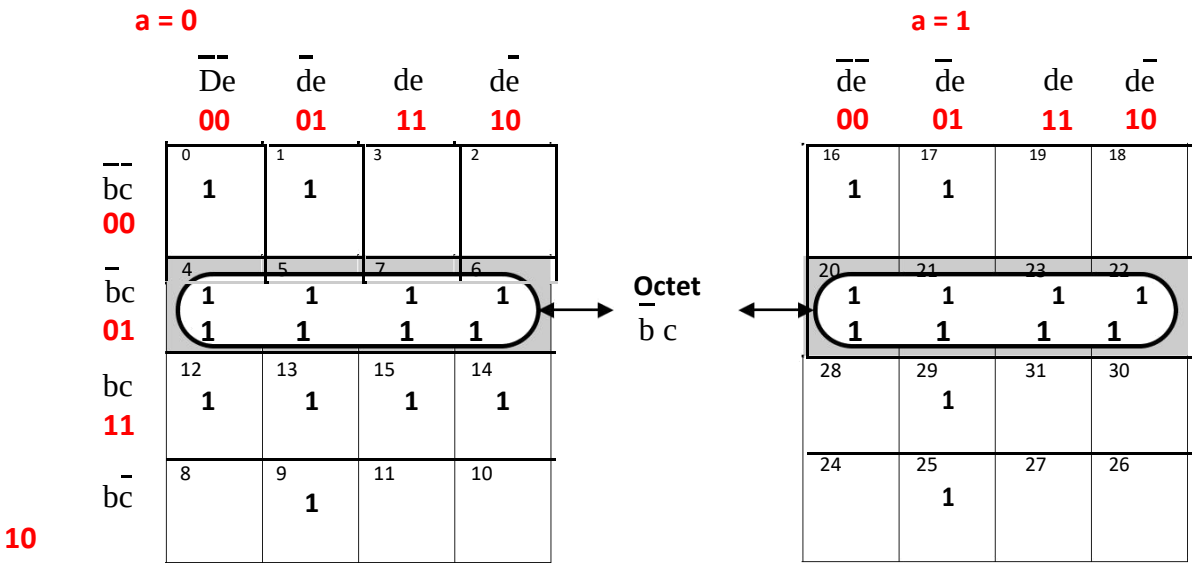

Figure 1.16: Grouping of Minterms for Example 1 - Step 1

The cells covered after step 1 are identified with a 'X' symbol as shown below.

Minterms	→	0	1	4	5	6	7	9	12	13	14	15	16	17	20	21	22	23	25	29
Covered after step 1	→			X	X	X	X								X	X	X	X		

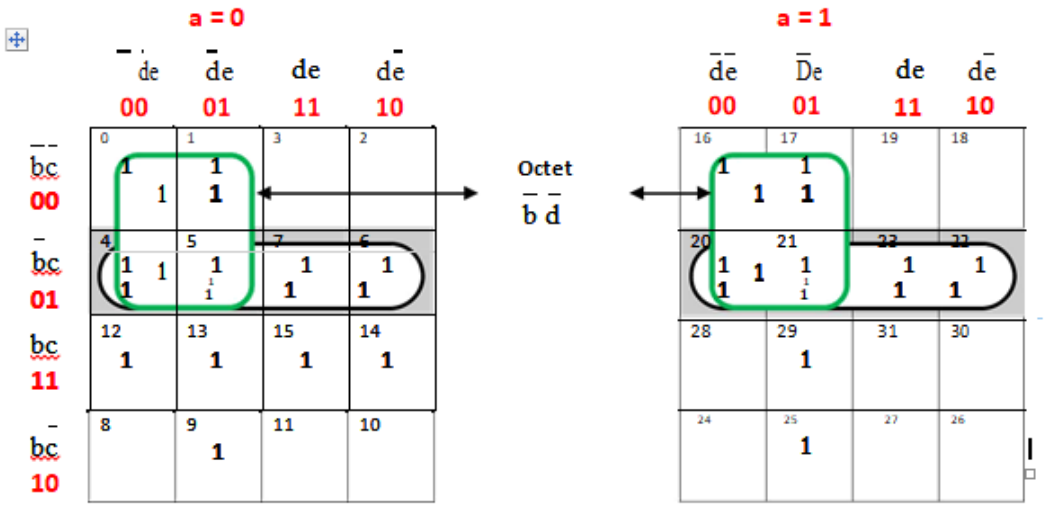

Now we see that another octet could be formed by combining (0, 1, 4, 5) with (16, 17, 20, 21), The minterms covered up to step 2 are as shown below and the process is repeated until we find a 'X' below each minterm.

Minterms →	0	1	4	5	6	7	9	12	13	14	15	16	17	20	21	22	23	25	29
Covered after step 2 →	X	X	X	X	X	X						X	X	X	X	X	X		

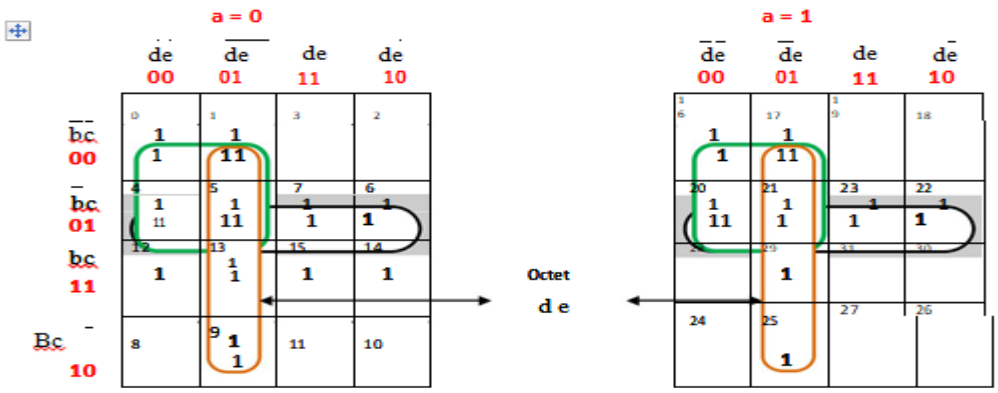

grouping of minterms for example 1- step-3

Minterms →	0	1	4	5	6	7	9	12	13	14	15	16	17	20	21	22	23	25	29
Covered after step 3 →	X	X	X	X	X	X	X		X			X	X	X	X	X	X	X	X

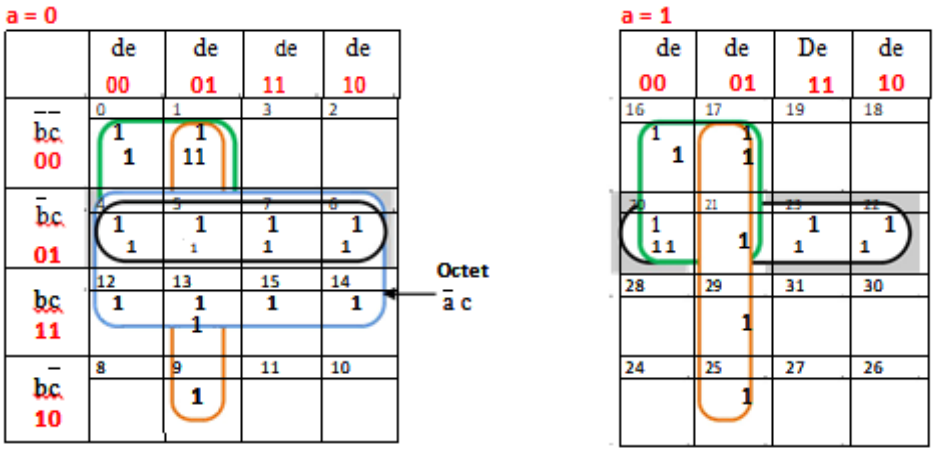

Figure 1.19: Grouping of Minterms for Example 3.1 - Step 4

Minterms →	0	1	4	5	6	7	9	12	13	14	15	16	17	20	21	22	23	25	29
Covered after step 4 →	X	X	X	X	X	X	X	X	X	X	X	X	X	X	X	X	X	X	X

Since all the minterms are covered at least once, by step 4, we stop the process. Hence, the MSOP expression, consisting of four octets, is finally obtained as

$$f(a,b,c,d,e) = b'c + b'd' + d'e + a'c$$

2. Draw the 2-level NAND circuit for the following expression $f = (a'b + c'd)e + bc\,(a + b)$ also obtain the minimal SOP expression. Draw the circuit using NAND gate only.

Sol:

To obtain the minimal SOP expression, we expand the function F further so as to express it in Σm form, as shown below.

Product Terms of F			
$a\,\bar{b}\,-\,-\,e$	$-\,-\,c\,d\,\bar{e}$	$a\,b\,c\,-\,-$	$-\,b\,c\,-\,-$
1 0 0 0 1 = 17	0 0 1 0 1 = 5	1 1 1 0 0 = 28	0 1 1 0 0 = 12
1 0 0 1 1 = 19	0 1 1 0 1 = 13	1 1 1 0 1 = 29	0 1 1 0 1 = 13
1 1 1 0 1 = 21	1 0 1 0 1 = 21	1 1 1 1 0 = 30	0 1 1 1 0 = 14
1 0 1 1 1 = 23	1 1 1 0 1 = 29	1 1 1 1 1 = 31	0 1 1 1 1 = 15
			1 1 1 0 0 = 28
			1 1 1 0 1 = 29
			1 1 1 1 0 = 30
			1 1 1 1 1 = 31

Figure 1.20: Product terms of 'F'

On removing the repeated minterms, which are shown as cut in the above table, the function F can be expressed as

$$F(a,b,c,d,e) = \Sigma m\,(5, 12, 13, 14, 15, 17, 19, 21, 23, 28, 29, 30, 31)$$

The five variable K-Map for F is as shown in Fig. 1.21.

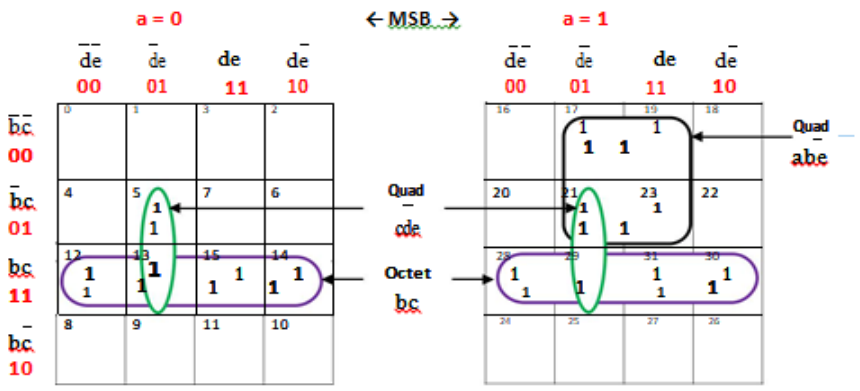

Five Variable K-Map for Example 2

The 2-level NAND circuit that implements the original function F, along with the simplified circuit drawn based on the minimal SOP expression obtained through K-Map, The simplification process has removed one 3-input NAND gate.

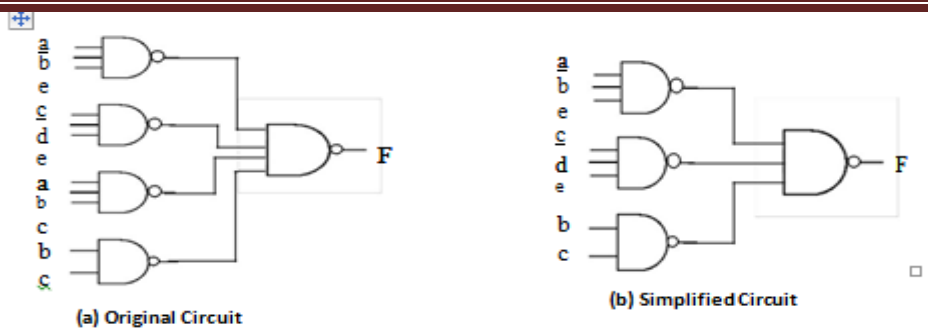

Two-Level NAND Circuits

3. Simplify the following Boolean function and obtain the most optimal sum of products expression.

f(a,b,c,d,e) = Σm (8, 12, 13, 18, 19, 21, 22, 24, 25, 28, 30, 31) + Σd.c (1, 2, 4, 6, 7, 11, 26)

Soln: This is an example of an incompletely specified 5-variable Booleanfunction. The don't care terms are treated in the same way as it was done in 3 and 4-variable K-Maps i.e. use them to our advantage if possible while grouping else simply ignore them. The K-Map for is drawn

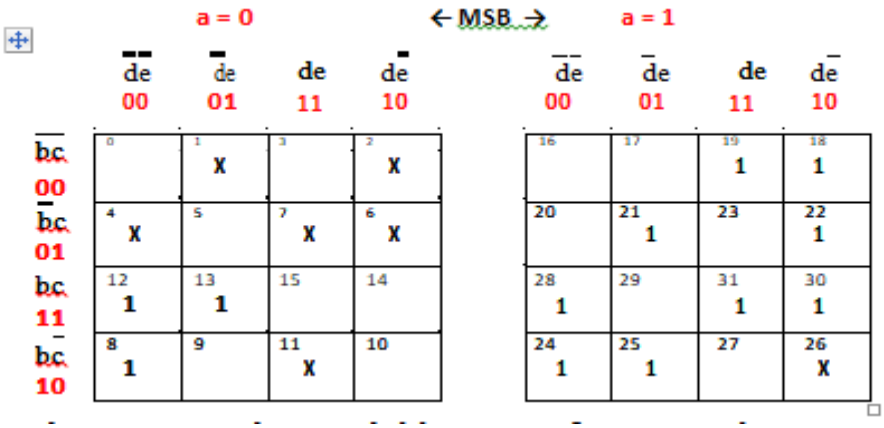

Five Variable K-Map for Example 3

The grouping of minterms is as shown Observe that all the don't care terms, except the one in cell 26, remain unused. There are 2 quads, 3 pairs and an isolated minterm. The reduced expression for each group. The MSOP expression is given by

$$f(a,b,c,d,e) = b\,\bar{d}\,\bar{e} + a\,d\,\bar{e} + a\,\bar{b}\,c\,d + a\,b\,\bar{c}\,\bar{d} + a\,b\,c\,d + a\,b\,\bar{c}\,d\,\bar{e}$$

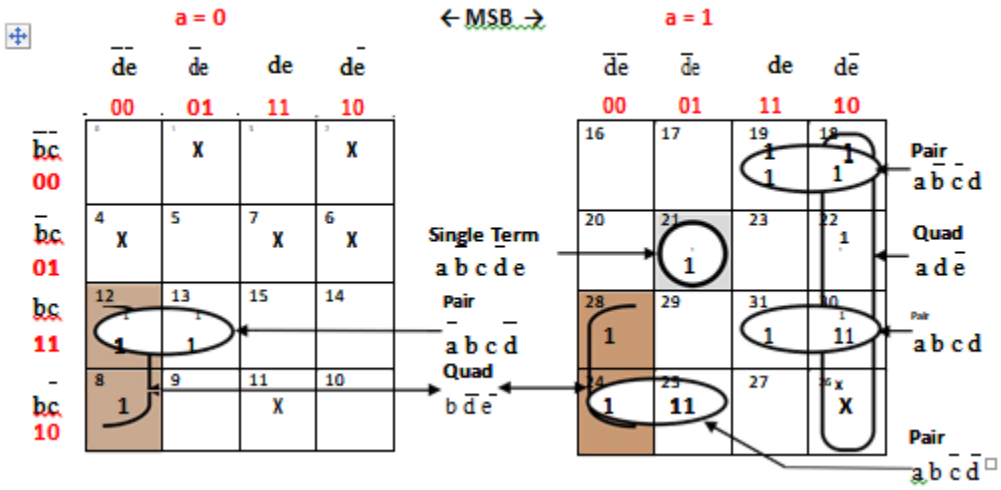

: Minterm grouping

Quine-McCluskey Method

- A systematic simplification procedure to reduce a minterm expansion to a minimum sum of products.
- Use XY + XY' = X to eliminate as many as literals as possible.
  - The resulting terms = prime implicants.
- Use a prime implicant chart to select a minimum set of prime implicants.

Determination of Prime Implicants

√ Eliminate literals

Two terms can be combined if they differ in exactly one variable.

AB'CD' + AB'CD = AB'C

1 0 1 0 + 1 0 1 1 = 1 0 1

X Y X Y' X

A'BC'D + A'BCD' (won't combine)

0 1 0 1 + 0 1 1 0 (check # of 1's)We need to compare and combine whenever possible.

Sorting to Reduce Comparisons

√ Sort into groups according to the number of 1's.

$$F(a,b,c.d) = \Sigma m(0,1,2,5,6,7,8,9,10,14)$$

- No need for comparisons

(1) Terms in nonadjacent group

(2) Terms in the same group

Group	0	0	0000
Group	1	1	0001
		2	0010
		8	1000
Group	2	5	0101
		6	0110
		9	1001
		10	1010
Group	3	7	0111
		14	1110

Comparison of adjacent groups:

– Use X + X = X repeatedly between adjacent groups

– Those combined are checked off.

– Combine terms that have the same dashes and differ one in the number of 1's. (for column II and column III)

$$f = a'c'd + a'bd + a'bc + b'c' + b'd' + cd'$$
$$(1, 5) \quad (5, 7) \quad (6, 7) \quad (0, 1, 8, 9) \quad (0, 2, 8, 10) \quad (2, 6, 10, 14)$$

$$f = a'bd + b'c' + cd'$$

Determination of Prime Implicants

	Column I			Column II			Column III	
group 0	0	0000	✓	0, 1	000–	✓	0, 1, 8, 9	–00–
group 1	1	0001	✓	0, 2	00–0	✓	0, 2, 8, 10	–0–0
	2	0010	✓	0, 8	–000	✓	~~0, 8, 1, 9~~	~~–00–~~
	8	1000	✓	1, 5	0–01		~~0, 8, 2, 10~~	~~–0–0~~
group 2	5	0101	✓	1, 9	–001	✓	2, 6, 10, 14	––10
	6	0110	✓	2, 6	0–10	✓	~~2, 10, 6, 14~~	~~––10~~
	9	1001	✓	2, 10	–010	✓		
	10	1010	✓	8, 9	100–	✓		
group 3	7	0111	✓	8, 10	10–0	✓		
	14	1110	✓	5, 7	01–1			
				6, 7	011–			
				6, 14	–110	✓		
				10, 14	1–10	✓		

Prime Implicants:

- The terms that have not been checked off are called prime implicants.

  f = 0-01 + 01-1+011- + -00- + -0-0 + --10

  = <u>a'c'd</u> + a'bd + <u>a'bc</u> + b'c' + <u>b'd'</u> + cd'

- Each term has a minimum number of literals, but minimum SOP for f:

  f = a'bd + b'c' + cd'

  (a'bd, cd' => a'bc)

  (a'bd, b'c' => a'c'd)

  (b'c', cd' => b'd')

Definition of Implicant:

Definition

- Given a function of F of n variables, a product term P is an implicant of F iff for every combination of values of the n variables for which P = 1, F is also equal to 1.
  - Every minterm of F is an implicant of F.
  - Any term formed by combining two or more minterms is an implicant.
  - If F is written in SOP form, every product term is an implicant.

Example: f(a,b,c) = a'b'c' + ab'c' + ab'c + abc = b'c' + ac

  - If a'b'c' = 1, then F = 1, if ac = 1, then F = 1. a'b'c' and ac are implicants.
  - If bc = 1, (but a = 0), F = 0, so bc is not an implicant of F.

Quine McClusky Procedure:

- QM procedure:
  - Find all product term implicants of a function
  - Combine non-prime implicants.
    - Remaining terms are prime implicants.
  - A minimum SOP expression consists of a sum of some (not necessarily all) of the prime implicants of that function.
    - We need to select a minimum set of prime implicants.
  - If an SOP expression contains a term which is not a prime implicant, the SOP cannot be minimum.

Prime Implicant Chart:

- Chart layout
  - Top row lists minterms of the function
  - All prime implicants are listed on the left side.
  - Place x into the chart according to the minterms that form the corresponding prime implicant.
- Essential prime implicant
  - If a minterm is covered only by one prime implicant, that prime implicant is called essential prime implicant. (9 & 14).

Essential prime implicant must be included in the minimum sum of the function

		0	1	2	5	6	7	8	9	10	14
(0, 1, 8, 9)	$b'c'$	X	X					X	(X)		
(0, 2, 8, 10)	$b'd'$	X		X				X		X	
(2, 6, 10, 14)	cd'			X		X				X	(X)
(1, 5)	$a'c'd$		X		X						
(5, 7)	$a'bd$				X		X				
(6, 7)	$a'bc$					X	X				

Selection of Prime Implicants:

√ Cross out the row of the selected essential prime implicants

√ The columns which correspond to the minterms covered by the selected prime implicants are also crossed out.

√ Select a prime implicant that covers the remaining columns. This prime implicant is not essential.

		0	1	2	5	6	7	8	9	10	14
(0, 1, 8, 9)	$b'c'$	X	X					X	X		
(0, 2, 8, 10)	$b'd'$	X		X				X		X	
(2, 6, 10, 14)	cd'			X		X				X	X
(1, 5)	$a'c'd$		X		X						
(5, 7)	$a'bd$				X		X				
(6, 7)	$a'bc$					X	X				

√

A Cyclic Prime Implicant Chart:

- Two or more X's in every column.
- F = Σm(0,1,2,5,6,7)
- F = a'b' + bc' + ac. (by try and error). No guarantee for this to be minimum.

0	000	All checked off	0,1	00-
1	001		0,2	0-0
2	010		1,5	-01
5	101		2,6	-10
6	110		5,7	1-1
7	111		6,7	11-

			0	1	2	5	6	7
1 →	(0, 1)	$a'b'$	*	*				
	(0, 2)	$a'c'$	*		*			
	(1, 5)	$b'c$		*		*		
2 →	(2, 6)	bc'			*		*	
3 →	(5, 7)	ac				*		*
	(6, 7)	ab					*	*